Sensor Input Module - Motion Sensor

Integrate Third-Party Occupancy Sensors with the Avi-on Network

Status LEDs & Config Button
Quick and easy validation of wiring and network

Contact Closure Input
Converts a third-party sensor's dry contact output into Avi-on network commands



External Antenna
Flexible antenna options if mounted in metal enclosures

Three Configurations
Standalone module, field-assembled KIT or factory-built IP67 Assembly

PRODUCT OVERVIEW

The Avi-on Sensor Input Module (SIM), configured as a motion sensor, connects third-party occupancy sensors to the Avi-on Bluetooth® mesh network. The SIM reads the sensor's dry contact output and converts it into an Avi-on network command. That lets code-driven or application-specific sensors trigger lighting without a native Avi-on sensor.

Occupancy behavior is programmed in the Avi-on network, the same way as with Avi-on Direct Connect motion sensors. That includes timeouts, vacancy mode, zones and scenes.

The SIM is available as a standalone module, a field-installable KIT with an external antenna for metal junction boxes, or a factory-built Assembly in an IP67 polycarbonate enclosure with the power supply pre-installed.

Features

- Connects third-party dry contact occupancy sensors to the Avi-on network
- Supports occupancy and vacancy lighting control strategies
- Available as a standalone module, KIT (field assembly) or ASSY (pre-assembled enclosure)
- KIT external antenna supports installation inside metal enclosures
- Assembly ships pre-wired in an IP67 enclosure with the power supply installed
- Secure, encrypted Bluetooth® mesh communication
- Suited for warehouses, high-bay and low-bay areas and retrofit occupancy sensing

ORDERING INFORMATION

	Part Number	Description	Antenna	Input Voltage
☐	**AVI-B-SIM-12-24VDC-EA-MS**	Sensor Input Module - Motion Sensor	UFL-Wire	12-24VDC
☐	**AVI-KIT-SIM-MS-277**	Sensor Input Module Kit - Motion Sensor	External (RPSMA)	90-300VAC
☐	**AVI-ASSY-SIM-MS-277**	Sensor Input Module Assembly - Motion Sensor	Internal (UFL-Wire)	90-300VAC

Note: *480VAC versions of the KIT and ASSY products are available in the Canada Quick Quote Tool (Canada QQT). To order, find the part with "480" in place of "277" in the part number.*

To order please contact Avi-on sales at **(877) AVION-US,** (877) 284-6687 or **prosales@avi-on.com** for order information or integration support.

Project		**Location/ Type**	

SPECIFICATIONS

SIM Module (all versions)

Input Voltage: 12-24VDC, Class 2
Power Consumption: 18mA
CC Input: 12-24VDC powered/non-powered contact closure detection, configurable for NO/NC (NO default)
Direct Connect Input: Compatible with all Avi-on Direct Connect™ motion/daylighting sensors
Size: 2.29in x 1.43in x 0.75in (58.2mm x 36.4mm x 19mm)
Mounting: Removable mounting tabs
Weight: 16g (0.56 oz)
Terminal Blocks: 22-16 AWG wires
Operating Temperature*:
Standalone: -40F to +158F (-40C to +70C)
KIT/ASSY: -22F to +158F (-30C to +70C)
Storage Temperature:
Standalone: -40F to +185F (-40C to +85C)
KIT/ASSY: -40F to +158F (-40C to +70C)
Humidity Rating: RH 5-95% (non-condensing), all versions

Note: *Operating controller at or above these levels may result in damage to components/product*

KIT & ASSEMBLY

Power Supply:
277 versions: AVI-PS-300-24-250, 24VDC (90-300VAC input)
480 versions: AVI-PS-480-24-500, 24VDC (90-480VAC input)
KIT Includes: SIM-B module, external monopole antenna (RPSMA) with UFL cable, 24VDC power supply, WAGO lever connectors, motion sensor identification label

KIT & ASSEMBLY (cont)

Assembly Includes: SIM-B module, IP67 polycarbonate enclosure, PG9 cable gland, pre-installed 24VDC power supply, WAGO connectors with internal wiring complete, stainless steel mounting hardware, UL/identification/beacon labels
Assembly Enclosure Size: 5.9in x 5.9in x 3.5in (150mm x 150mm x 90mm)
Assembly Mounting: Surface mount

Wireless & Regulatory

Radio Frequency: 2.4GHz
Wireless Standard: BLE 4.2 with Mesh
Point to Point Range:** 80ft with obstructions and 350ft unobstructed
Security: AES 128-bit encryption for device to device communication, AES 256-bit encryption for device to cloud communication
Warranty: 5 years; 10 years optional
Regulatory:
FCC ID: 2AFZI-AVIBG21
IC ID: 20544-AVIBG21
BQB: DID D063032
CE: EN IEC 61000-6-1:2019, EN IEC 61000-6-3:2021
UL 916, UL 2043 (Plenum Rated, standalone only)
UL 924 Emergency Lighting Equipment

*For temperatures below freezing or dew point, the device should be sealed in a watertight container to prevent frost buildup

**When communicating through the mesh, range is essentially unlimited (5000ft+)

See Safety and Certification Details here: https://tinyurl.com/y4698945

DIMENSIONS

SIM

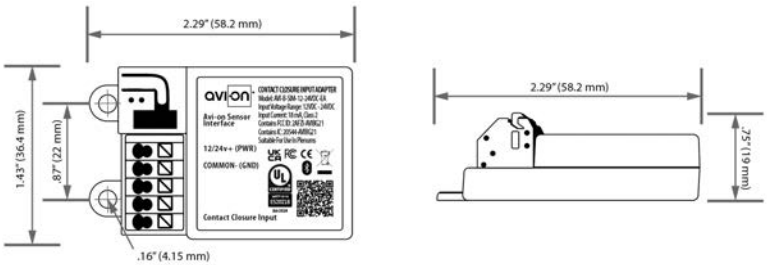

Assembly

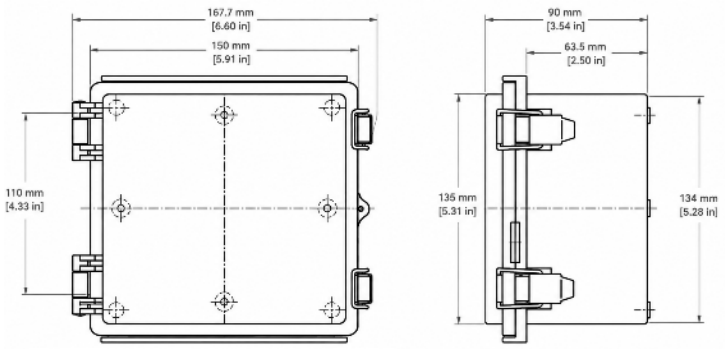

WIRING DIAGRAM

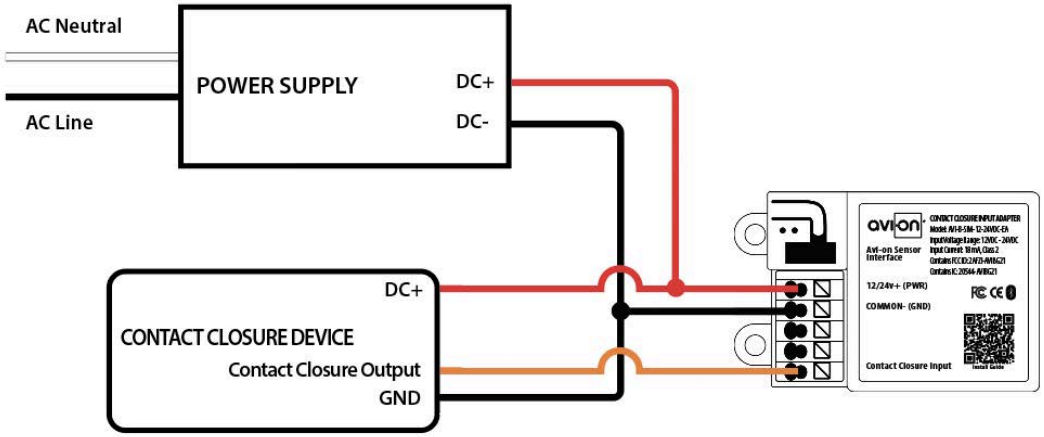

ASSEMBLY

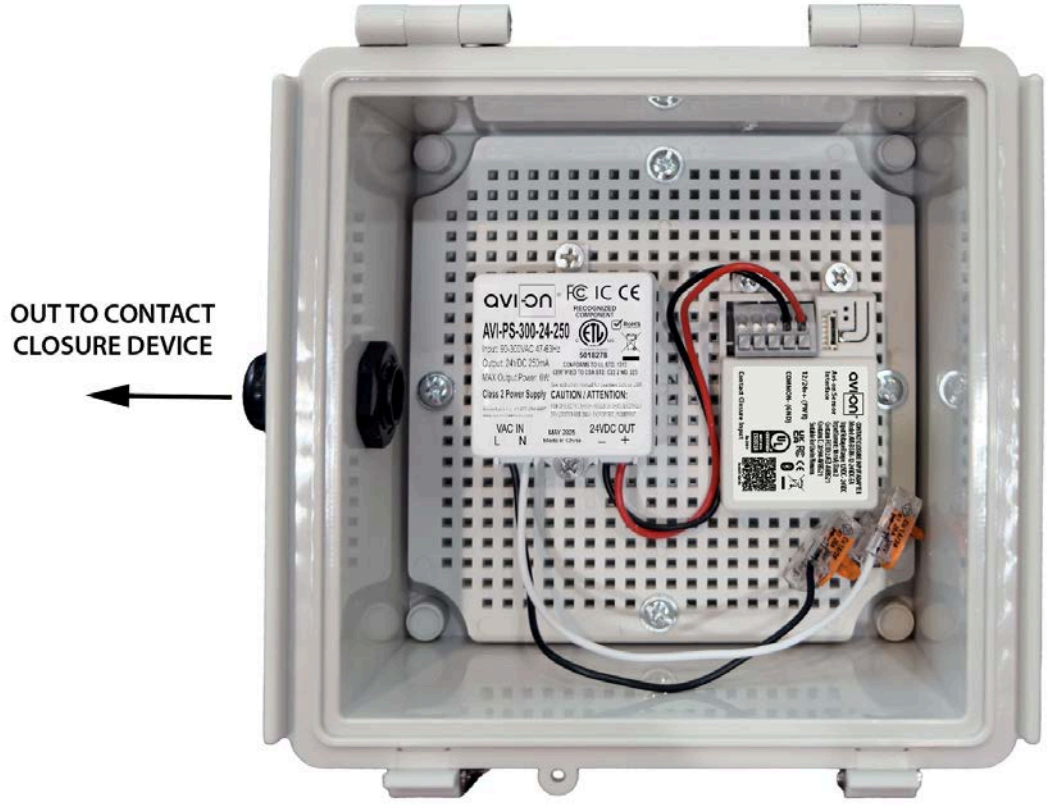

ALL PRODUCT, PRODUCT SPECIFICATIONS AND DATA ARE SUBJECT TO CHANGE WITHOUT NOTICE TO IMPROVE RELIABILITY, FUNCTION OR DESIGN OR OTHERWISE.The information contained herein is believed to be reliable. Avi-on makes no warranty, representation or guarantee regarding the information contained herein, the suitability of the products for any particular purpose, or the continuing production of any product. Avi-on assumes no responsibility or liability whatsoever for the use of the information contained herein. The information contained herein, or any use of such information does not grant, explicitly or implicitly, to any party any patent rights, licenses, or any other intellectual property rights, whether with regard to such information itself or anything described by such information.